MINISTRY OF EDUCATION AND SCIENCE OF UKRAINE

National Technical University

"Kharkiv Polytechnic Institute"

ANALYSIS OF TRANSFORMERS AND ELECTRICAL MACHINES CONSTRUCTIONS AND CALCULATION OF THEIR CHARACTERISTICS

THE DESIGN JOBS AND METHODICAL INSTRUCTIONS
ON THE DISCIPLINE «ELECTRICAL MACHINES»

for students of specials141 - Electric power engineering,
electrical engineering and electrical engineering

prof. Shevchenko V.V.

Kharkiv - 2020

INTRODUCTION

This edition is dedicated to the implementation of methodical calculation job «Transformers and electrical machines constructions analysis and characteristics calculation» on the discipline "Electrical machines".

The objective is to consolidate theoretical knowledge and development of these course practical skills of calculation characteristics of transformers and electrical machines alternating current (AC) and direct current (DC).

The objects of study are transformers and electrical machines, which are the basis of electric power in various industries.

The subject of this course is electric machines, which are used in practice to convert one form of energy into another: mechanical to electrical (generator), electrical to mechanical (electric motors), and power transformers, which are used to convert the parameters of AC current and voltage.

After the fulfillment of the assignments the student has to know the structure, basic elements, the principle of operation and characteristics of transformers and electrical machines, peculiarities of motors starting, the ways of their frequency rotation control and braking. The student should be able to evaluate new electrical equipment, take into account technical and economic requirements.

This course contains five tasks to five units of the discipline. Control issues and optional problems are formulated for each section, as well as guidance to solve them is given. Calculation jobs are the student’s final document to complete the discipline. The report on the work done must be finished in written form and defended by the examination date. The tasks and the scale of the work must be agreed by the course lecturer of this discipline.

The report shall begin with a cover page; the sample of witch is given in Appendix A. It is necessary to formulate the problem, specify the input numerical data, provide charts and graphs, and specify the order of the calculation performance in the alphabetical and numerical form while the report. At the end of the report the student has to give the list of information sources used in the work process. Charts and graphs should be built on the graph paper, with axes of standard lettering of quantities and units of measurement indicated. The students should choose the variant of the job taking the last two numbers of the test book, or number in the list of the academic group.

New modern notation symbol system of electrical, magnetic, mechanical and energy values, which correspond to the state standards, are used in this study course.

1 TRANSFORMER DESIGN DESCRIPTION AND THEIR PARAMETERS CALCULATION IN THE NOMINAL MODE

1.1 Theoretical assignments

1. Make up the scheme "Classification of transformers".

2. Perform a sketch of three-phase transformer with two windings per phase and oil-cooled. Identify the main elements, describe their use. Make a sketch of designs of cores and windings of power transformers.

3. Record triggers conditions of three-phase transformers for parallel operation. Analyze what would happen if none of the condition is fulfilled.

4. Write down the conditions of turning on three-phase transformers for parallel operation with the power grid. Analyze what will be if neither of the above conditions is provided.

1.2. Practical assignment

Calculate the parameters and build the schemes of equivalent circuit for a three-phase transformer (m = 3, where m - number of phases), which operates in the power grid with a frequency of voltage f = 50 Hz and has the data shown in Fig. 1 and Table 1. The calculations are to be performed for the transformer, operating in the idle mode, in the laboratory shorting (SC) and in the nominal mode.

Indicate the numerical values of the elements, currents, electric driving force (EMF) and voltages on Fig. 2.

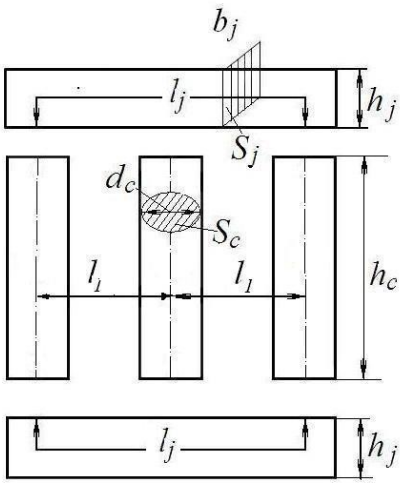

Figure 1 –The dimensions of the transformer core

Calculate and model the characteristics of made transformer in the idle mode $P_0(U_p)$, $I_{p0}(U_p)$, $\cos\varphi_{p0}(U_p)$ and in the laboratory shorting $P_k(U_p)$, $I_{pk}(U_p)$, $\cos\varphi_{pk}(U_p)$.

Calculate the transformer nominal coefficient of performance (COP) and the load value (in parts of the nominal power) at which transformer coefficient of performance (COP) reaches its maximum value. Determine the maximum COP and compare it with the nominal value.

Note: in the section the following notations are used:

– prime winding – the index *p* (*prime*);

– second winding – the index *s* (*second*);

– active resistance R_p and reactive resistance dissipation X_p of the primary winding;

– reduced active resistance R_s' and reduced reactive resistance dissipation X_s' of the secondary winding;

– active and reactive resistance of the transformer magnetization core (R_m and X_m).

1.3 Methodological instructions for the practical assignment implementation

Calculate nominal values of phase voltage of the transformer primary winding (U_{pNl}) and secondary one (U_{sNl}) using the line voltages values (U_{sN} and U_{pN} respectively) given in Table 1. Only the values of the transformer phase voltages must used in further calculations.

Define the magnetic flux in the transformer core determine, *Web*,

$$\Phi = \frac{U_{sN}}{4{,}44 \cdot f \cdot N_s}.$$

Determine the magnetic flux density in the rods (B_C) and yokes (B_j) of transformer

$$B_c = \frac{\Phi}{k_{Fe} \cdot S_c},\ Tl, \qquad B_j = \frac{\Phi}{k_{Fe} \cdot S_j},\ Tl.$$

where k_{Fe} – the filling factor of the transformer core steel. It is equal to 0.95 when insulating varnish steel sheets.

The values of magnetic flux density should be within the range 1,3–1,6 Tl. If the values do not fall within this given interval, change the effective values of the cross sections of the transformer's cores and yokes.

Table 1 - Parameters of the three-phase transformers

Variant number	Nominal total power	Nominal voltage of the primary winding	Nominal voltage of the secondary winding	Number of turns of the secondary winding	Rod diameter	Effective cross-sectional area of the rod	Cross sectional area of the yoke	Core height	Yoke height	Distance between the axes of the rods	Short-circuit voltage	Load power factor	Power loss in the laboratory mode	Schemes and winding connection groups
	S_N kV·A	U_{pNl} kV	U_{sNl} kV	N_s	d_c, cm	S_c cm^2	S_j, cm^2	h_c cm	h_j cm	l_1, cm	u_k, %	$\cos\varphi_s$	P_k, kW	
1	50	6.0	0.525	192	12	89	90	25	12	25	5.5	0.82	1.70	Y/Δ-11
2	100	35.0	6.0	200	16	580	570	41	14	35	6.5	0.82	4.90	Y/ Y-0
3	180	31.5	6.0	280	18	410	400	52	16	39	6.5	0.83	4.60	Y/ Y-0
4	320	35.0	6.0	360	20	330	326	39	18	35	5.5	0.80	5.60	Y/ Y-0
5	5600	110.0	10.0	200	22	580	570	72	19	45	6.5	0.81	47.8	Y/ Y-0
6	1000	35.0	0.66	470	30	220	210	83	41	46	5.5	0.80	18.54	Y/Δ-11
7	1800	35.0	6.0	640	32	310	300	85	28	57	6.5	0.85	24.22	Y/Y-0
8	3200	35.0	6.0	660	36	300	310	100	31	62	7.0	0.84	36.5	Y/Y-0
9	5600	35.0	6.0	600	43	320	300	110	37	70	7.5	0.85	49.6	Y/Y-0
10	20	6.0	0.40	100	9	75	72	30	19	21	5.5	0.83	0.95	Y/Y-0
11	60	35.0	6.0	200	13	580	600	41	34	31	6.5	0.83	0.53	Y/Y-0
12	100	35.0	0.66	150	15	86	84	38	34	46	5.5	0.80	1.46	Y/Y-0
13	180	35.0	3.15	300	19	200	180	42	36	49	5.5	0.84	5.60	Y/Δ-11
14	320	35.0	6.0	330	20	350	340	63	47	51	6.5	0.85	7.23	Y/Y-0
15	20	10.0	0.66	380	12	322	316	40	50	20	6.5	0.83	0.94	Y/Y-0

Prove your suggestions with calculations:

1) select the magnetic induction values from the given range. Recalculate the cross section area of rods and yoke of the transformer (S_c and S_j respectively)

$$S_c = \frac{\Phi}{k_{Fe} \cdot B_c},\ m^2; \qquad S_j = \frac{\Phi}{k_{Fe} \cdot B_j},\ m^2;$$

2) Calculate the diameter of the rods (d_c) and the height of the yoke (h_j) in the obtained values of the cross sections.

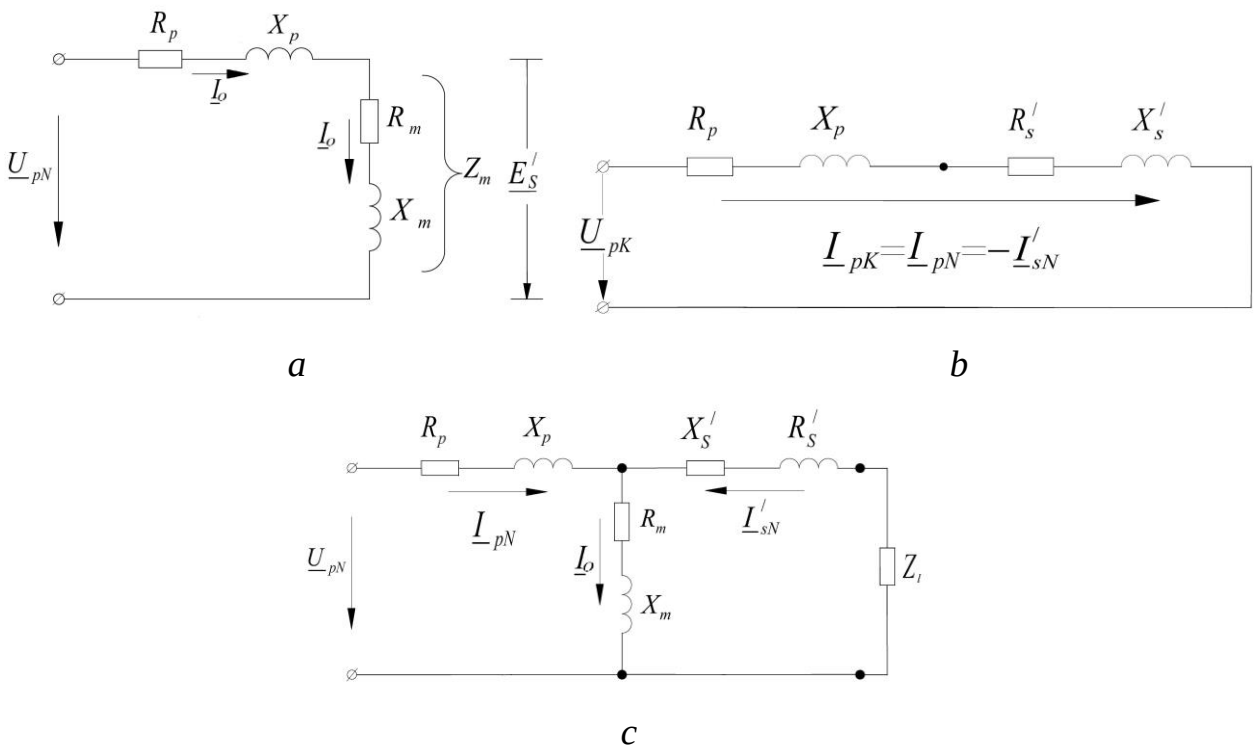

Figure 2 – Equivalent circuit diagram of the transformer in different modes:
a - idling mode, *b* - laboratory short circuit; *c* - nominal mode

Recalculate the cross-section of the yoke; accept that its width (b_j) is the new value of the rod diameter (d_c). Specify the height of the yoke. The new value of the rod diameter (d_c) and the yoke height (h_j) respectively, *m*,

$$d_c = \sqrt{\frac{4S_c}{\pi}}; \qquad h_j = \frac{S_j}{d_c}.$$

In further calculations use cross sections that got.

Determine the strength of the magnetic field in the rods and yokes (H_c and H_j, respectively) for electrotechnical steel 3411 by value of magnetic field induction according to Table 2.

Calculate the magneto motive force (MMF) for a single phase transformer.

When calculating the MMF you must take into account the air gaps in the joints rods and the yokes of transformers. Number of the air gaps (per each phase) is 7/3. The total air gap is assumed to be $\delta = 5 \cdot 10^{-5}$ *m* per phase. Magnetic flux density (induction) in the air gaps in the rods and yokes joints is equal to the magnetic flux density in the rods B_c.

Table 2 –Magnetic field strength and specific magnetic power loss for electrotechnical steel 3411

Magnetic flux density, *B*, *Tl*	0.6	0.7	0.8	0.9	1.0	1.1	1.2	1.3	1.4	1.5	1.6
Magnetic field strength, H_c, *A/m*	190	260	318	397	502	647	843	1140	1580	2500	4370
Specific magnetic power loss p_{mag}, *W/kg*	0.54	0.61	0.76	0.96	1.20	1.46	1.76	2.10	2.45	2.80	3.37

The length of magnetic field line in the yoke of the transformer

$$l_j = 2l_1 + 2h_j,\ m.$$

Calculate the average value of MMF (F_a) per phase

$$F_a = H_c \cdot h_c + \frac{2}{3} H_j \cdot l_j + \frac{7}{3} \cdot \frac{B_c}{\mu_0} \cdot \delta,\ A,$$

where μ_0 – the magnetic constant which equals $4\pi \cdot 10^{-7}$ *Gn/m*.

Build the graphs $B(H)$ and $B(p_{mag})$ according to Table 2. This allows you to select more accurate values of tension and specific magnetic losses depending on the value of magnetic flux density, as well as to continue the features in the target area.

Determine the number of turns of the transformer primary winding

$$N_p = \frac{N_s \cdot U_{pN}}{U_{sN}}.$$

The number of turns must be **an integer**.

Determine the reactive component of the magnetizing current

$$I_{0r} = \frac{F_a}{\sqrt{2} \cdot k \cdot N_p},\ \text{A},$$

where k – factor that implies higher harmonics in the magnetizing current. Its value lies within the range from 1.5 to 2.

Calculate the weight of steel of the rods (m_c) and yokes (m_j) of the transformer

$$m_c = N_c \cdot S_c \cdot h_c \cdot \gamma_{Fe} \cdot k_{Fe},\ \text{kg},$$

$$m_j = N_j \cdot S_j \cdot l_y \cdot \gamma_{Fe} \cdot k_{Fe},\ \text{kg},$$

where l_y - length of the yoke, $l_y = 2 \cdot l_1 + d_c$, m;

N_c and N_j - the number of rods and yokes of the transformer

$$N_c = 3; \qquad N_j = 2;$$

γ_{Fe} - specific mass of steel is $7.8 \cdot 10^3$ *kg/m*^{3}.

Determine the magnetic power losses in the transformer core (basic and additional) $P_{mag} = (k_d + 1) \cdot \left(p_{magc} \cdot m_c + p_{magj} \cdot m_j \right)$, W,

where p_{magc}, p_{magj} – specific power losses in rods and the yokes of transformer. Their values should be selected from Table 2 according to the magnetic flux density, *W/kg*;

k_d – the factor of additional losses registration P_{ad} is chosen from the range 0.1–0.15.

Determine the active component of the current in an idling mode is

$$I_{0a} = \frac{P_{mag}}{m \cdot U_{pN}}, \text{ A.}$$

Determine the no-load current of the primary winding (magnetizing current) and the power factor of the transformer in an idling mode are

$$I_{p0} = \sqrt{I_{0r}^{\ 2} + I_{0a}^{\ 2}}, \text{ A;} \qquad \cos\varphi_0 = \frac{P_{mag}}{m \cdot U_{pN} \cdot I_{p0}}.$$

Define parameters of the equivalent circuit of the transformer in the idling mode are:

– total resistance of the equivalent circuit in the idling mode is

$$Z_0 = \frac{U_{pN}}{I_{p0}}, \text{ Ohm;}$$

– active resistance of the equivalent circuit in the idling mode is

$$R_0 = \frac{P_{mag}}{m \cdot I_{p0}^2}, \text{ Ohm;}$$

– reactive resistance of the equivalent circuit in the idling mode is

$$X_0 = \sqrt{Z_0^{\ 2} - R_0^{\ 2}}, \text{ Ohm.}$$

Calculate the parameters of the equivalent circuit of the transformer in the laboratory short circuit (SC) mode are:

– total resistance of the equivalent circuit in the laboratory SC mode is

$$Z_k = \frac{U_{pk}}{I_{pN}}, \text{ Ohm;}$$

where U_{pk} – the voltage laboratory SC mode is $U_{pk} = \frac{u_k}{100\ \%} \cdot U_{pN}$, V;

– nominal current of primary winding is $I_{pN} = \frac{S_N}{m \cdot U_{pN}}$, A;

– active resistance of the equivalent circuit in the laboratory SC mode is

$$R_k = \frac{P_k}{m \cdot I_{pN}^2}, \text{ Ohm;}$$

– reactive resistance of the equivalent circuit in the laboratory SC mode is

$$X_k = \sqrt{Z_k^2 - R_k^2}, \text{ Ohm;}$$

– the transformer power factor in the laboratory SC mode is

$$\cos\varphi_k = \frac{P_k}{m \cdot U_{pk} \cdot I_{pN}}.$$

Calculate the parameters of the transformer equivalent circuit in the nominal mode are:

– active resistance of the transformer primary winding equals the given value of the reduced reactive resistance of the transformer secondary winding is

$$R_p = R_s^{'} = \frac{R_k}{2}, \text{ Ohm;}$$

– reactive resistance of the transformer primary winding equals the given value of reduced reactive resistance of the transformer secondary winding is

$$X_p = X_s^{'} = \frac{X_k}{2}, \text{ Ohm;}$$

– resistance of the magnetizing circuit of the transformer is

$$R_m = R_o - R_p, \text{ Ohm;} \qquad X_m = X_o - X_p, \text{ Ohm.}$$

The given value of the mutual electromotive force (EMF) of the transformer secondary winding $E_{so}^{/}$ should be defined from vector diagram of the transformer in the idling mode, Fig. 3.

Build the diagram using the following algorithm:

1) make a system of equations for the idle mode of the transformer

$$\begin{cases} U_{pN} = -E_p + I_{p0} \cdot R_p + j \cdot I_{p0} \cdot X_p; \\ I_{op} = I_{p0a} + j \cdot I_{p0r}; \\ E_p = E_s^{/}; \end{cases}$$

2) select the scale for voltage, EMF and currents;

3) build a chart. To build, transform the first equation of the system so that the vector (–*Ep*) becomes the resulting

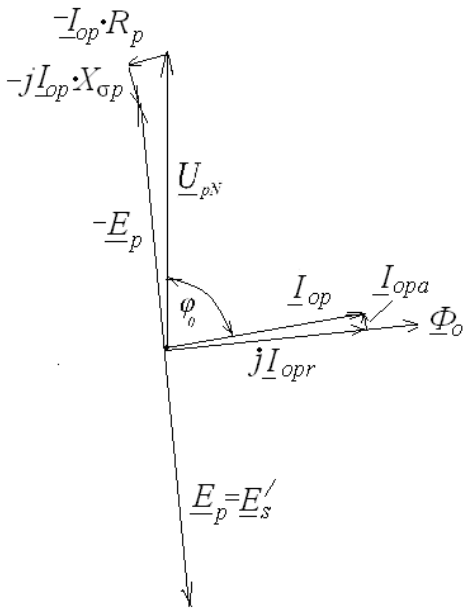

Figure 3 –Vector diagram of the transformer in the idling mode

Determine the coefficient of performance (COP) of the transformer in the nominal mode from the known values of power losses in the idling mode and at the laboratory SC mode is

$$\eta_N = 1 - \frac{P_0 + \beta_{Is}^2 P_k}{\beta_{Is} \cdot S_N \cdot \cos\varphi_s + P_0 + \beta_{Is}^2 \cdot P_k},$$

where P_0, W – power losses on the idling mode, which are the magnetic losses in the transformer magnetic core, $P_0 = P_{mag}$;

I_s, A – the current of the secondary winding of the transformer (the load current);

I_{sN}, A – the nominal current of the secondary winding of the transformer;

$\beta_{Is} = \dfrac{I_s}{I_{sN}}$ – the load factor of the transformer.

β_{Is} = 1 at the nominal loading.

The transformer maximum COP is achieved when the constant and variable power losses are equal. Calculate the load value (in parts of the nominal capacity) at which the COP of the transformer is maximum

$$\beta_{Is\ \max} = \sqrt{\frac{P_0}{P_k}}.$$

Then the maximum transformer COP can be calculated is

$$\eta_{\max} = 1 - \frac{P_0 + \beta^2_{Is\ \max} \cdot P_k}{\beta^2_{Is\ \max} \cdot S_N \cdot \cos\varphi_s + P_0 + \beta^2_{Is\ \max} \cdot P_k}.$$

Define the transformer characteristics in the idling mode $P_0,\ I_0, \cos\varphi_0(U_p)$ and in the laboratory SC of the transformer $P_k,\ I_k, \cos\varphi_k(U_p)$. To do this, repeat the calculations of the transformer parameters on the idling mode and at the laboratory SC mode for voltage values: U_{p0*} = 0,2; 0,4; 0,6; 0,8; 1,1; U_{pk*} = 0,02; 0,04; 0,08; 0,1.

The calculation results record in Tables 3 and 4 (the numbers in the tables are given as an example).

Table 3–Calculated values for the transformer characteristics design in the idling mode

Values	Measurements					
U_{po}^*	0.2	0.4	0.6	0.8	1.0	1.1
$U_p = U_{po}^* \cdot U_{pN}$, V	693	1386	2078	2771	3464	3810
$U_{\varphi s} = U_{p0*} \cdot U_{sN}$, V	120	240	360	480	600	660
$\Phi = \dfrac{U_p}{4{,}44 \cdot f \cdot N_s}$, Vb	0.023	0.045	0.068	0.09	0.113	0.124
$B_c = \dfrac{\Phi}{k_{Fe} \cdot S_c}$, Tl	0.29	0.57	0.86	1.14	1.43	1.57
$B_j = \dfrac{\Phi}{k_{Fe} \cdot S_j}$, Tl	0.28	0.57	0.85	1.13	1.41	1.55
$H_c = f(B_c)$, A/m, from table 2	120	210	350	780	1850	3850
$H_j = f(B_j)$, A/m, from table 2	130	220	360	720	1720	3450

Values	Measurements					
$F_a = H_c \cdot h_c + \frac{2}{3} H_j \cdot l + \frac{7}{3} \cdot \frac{B_c}{\mu_o} \cdot \delta$, A	480	930	1270	1440	1710	1990
$I_{0r} = \frac{F_a}{\sqrt{2} \cdot k \cdot N_p}$, A	18	36	54	61.3	72.8	84.7
p_{magc}, W/kg, from table 2	0.261	0.513	0.772	1.56	2.72	3.17
p_{magj}, W/kg, from table 2	0.254	0.513	0.766	1.52	2.60	3.05
$P_{mag} = (k_d + 1) \cdot (p_{magñ} \cdot m_c + p_{magj} \cdot m_j)$, W	9520	1340	19700	22800	27600	30400
$I_{0a} = \frac{P_{mag}}{m \cdot U_{pN}}$, A	0.03	0.11	0.19	0.22	0.27	0.29
$I_{0p} = \sqrt{I_{0r}^2 + I_{0a}^2}$, A	18	36.1	54.05	61.4	72.9	84.9
$\cos\varphi_0 = \frac{P_{mag}}{m \cdot U_{pN} \cdot I_{0p}}$	0.112	0.084	0.068	0.05	0.03	0.018

Table 4–Calculated values for the transformer characteristics design in the laboratory SC mode

Values	Measurements				
U_{pk*}	0.02	0.04	$u_{k\%}$	0.08	0.1
$U_{pk} = U_{pk*} \cdot U_{pN}$, V	70	140	192.5	280	350
$I_{pk} = U_{pk*} \cdot I_{pN}$, A	35	70	96	140	175
$P_k = m \cdot I_{pk}^2 \cdot R_k$, kW	2.0	7.99	15.0	32.0	49.9
$\cos\varphi_k = \frac{P_k}{m \cdot U_{pk} \cdot I_{pN}}$	0.272	0.272	0.272	0.272	0.272

2 GENERAL QUESTIONS OF THE ALTERNATING CURRENT MACHINE THEORY

2.1 Assignments

Draw two-layer three-phase circuit, ($m_s = 3$), of the stator winding of machines of alternating current (AC machine), in which integer grooves per pole and per phase q_s.

The winding has a short step to the grooves.

Data are given in Table 5.

Calculate the coefficients of distribution and shortening for the 1st, 5th and 7th current harmonics of the stator winding and winding factors for these harmonics.

Table 5 – Data for constructing the circuit of the stator winding for the AC machines

Variant number	**1**	**2**	**3**	**4**	**5**	**6**	**7**	**8**
Number of the stator teeth, Q_s	36	24	24	12	36	18	36	48
Number of poles, $2p$	4	2	4	2	2	2	6	8
Shortening of the step, β_s	8/9	4/5	5/6	5/6	5/6	5/6	5/6	11/12
Scheme of the winding connection	Y	Y	Δ	Y	Δ	Y	Δ	Δ
Variant number	**9**	**10**	**11**	**12**	**13**	**14**	**15**	
Number of the stator teeth, Q_s	54	36	36	48	30	24	18	
Number of poles, $2p$	6	4	2	4	2	4	2	
Shortening of the step, β_s	8/9	7/9	7/9	2/3	5/6	2/3	5/6	
Scheme of the winding connection	Y	Y	Y	Y	Y	Y	Δ	

Answer the questions in the written form:

1) why are the stators windings of AC machines shortened and distributed?

2) how the shortening and the distribution of the stator windings affect of the magnitude of the first harmonic EMF?

2.2 Methodological instructions for the assignments implementation

Calculate the number of slots per pole and phase $q_s = \dfrac{Q_s}{2p \cdot m_s}$,

where Q_s –number of slots of the stator core; p –number of pole pairs of the stator.

Indicate the numbers of slots on a sheet of graph paper according to the task, with an interval of 1.0 *cm*. Mark the pole pitch τ_p in the stator teeth with vertical dashed lines. The example of the construction of the three-phase two-layer scheme deployed shortened stator winding (β_s = 5/6) for phase A is shown in Fig. 4. As an

example in Fig. 5 shows of the construction of a three-phase two-layer shortened (β_s = 5/6) winding of stator for three phases in conjunction with «Y» is shown.

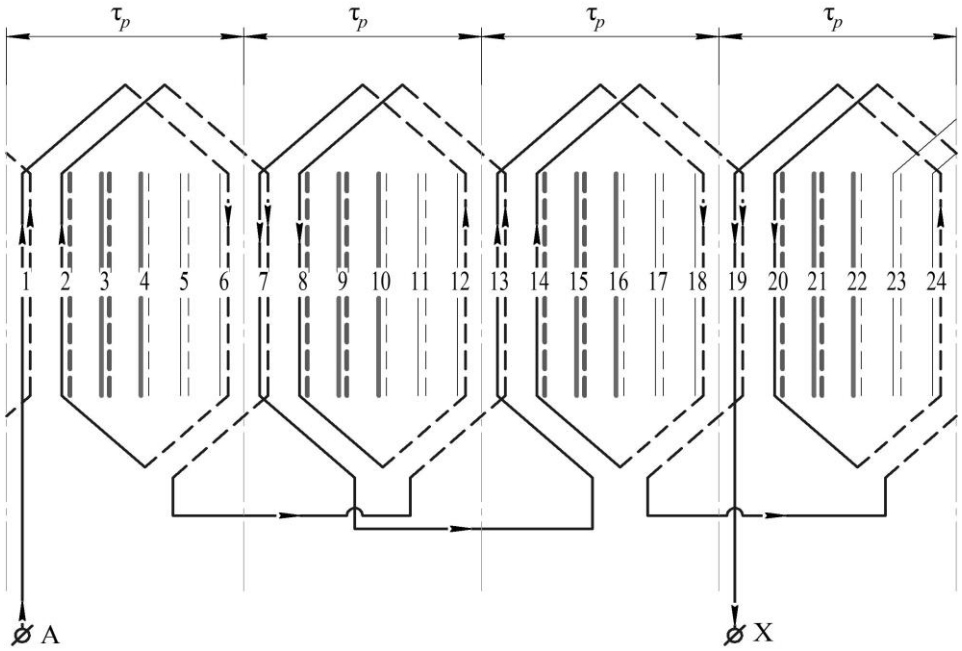

Figure 4 – The example of construction the scheme of three-phase two-layer distributed shortened (β = 5/6) stator winding (for one phase A)
Q_s = 24, $2p$ = 4, β_s = 5/6, q_s = 2, $y_{s.sh}$ = 5

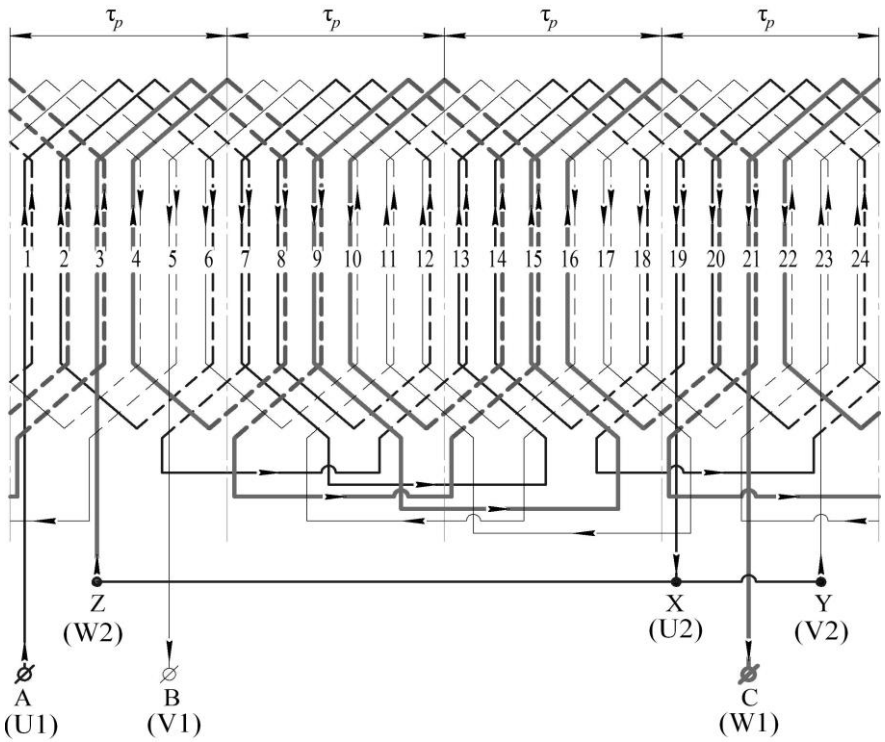

Figure 5 – The example of construction the scheme of three-phase two-layer distributed shortened (β = 5/6) stator winding Q_s = 24, $2p$ = 4, β_s = 5/6, q_s = 2, $y_{s.sh}$ = 5

Calculate the pole pitch (in the tooth divisions)

$$\tau_p = \frac{Q_s}{2p}.$$

Take pencils of three colors (for example, black for phase *A*, green for phase *B*, red for phase *C*). Mark the lower layer of the stator windings by the solid lines in different colors, according to the value of q_s. Calculate the steps of the stator winding regarding β_s (without shortening $y_{s.d}$, with shortening $y_{s.sh}$).

Diametric and shorted steps by the slots, respectively

$$y_{s.d} = \frac{Z_s}{2p}; \qquad y_{s.sh} = \beta_s \cdot \frac{Z_s}{2p}.$$

According to the instructions, connect the coil into a "star" or "triangle".

Calculate winding coefficients (K_{Wv}) for the 1-st, 5-th and 7th harmonics (the numbers of current and voltage harmonics ν = 1, 5, 7)

$$K_{Wv} = K_{p.v} \cdot K_{d.v},$$

where $K_{p.v}$ –velocity coefficient, which accounts the decrease of EMF of the ν-th harmonic winding centerline compared to EMF of shortened winding

$$K_{Wv} = \sin\left(\frac{\pi}{2} \cdot \beta_s \cdot v\right);$$

$K_{d.v}$ - distribution coefficient, which accounts the decrease of EMF of the ν-th harmonic windings distributed along the slots compared with concentrated winding EMF

$$K_{d.v} = \frac{\sin(\pi v / 2m)}{q_s \cdot \sin(\pi v / 2m \cdot q_s)}.$$

The first harmonic of EMF (ν = 1) for shortened and distributed stator winding

$$E_s = 4{,}44 \cdot \Phi \cdot f \cdot N_s \cdot K_{W1}, \text{ V},$$

where $K_{W1} = K_{p1} \cdot K_{d1}$ – winding coefficient of the first (working) harmonic.

The value K_{W1} for shortened and distributed stator winding is always less than one. Therefore, AC machines in which the complete distribution of the slots of the stator winding and shortening of their pitch is made, the value of the first (working)

harmonic EMF is less than the diametrical and concentrated winding.

This is done to improve the shape of a circular rotating magnetic field by reducing the effect of higher harmonics (5th and 7th harmonics).

3 CALCULATIONS OF THE ENERGY DIAGRAM AND CHOICE OF THE ASYNCHRONOUS MOTOR STARTING RESISTORS

Build the energy diagram of the three-phase asynchronous motor (AM) with a phase rotor using the data in Table 6. The Stator winding is connected in the Y. The frequency of voltage is f = 50 Hz. Take the given values of rotor winding resistances:

$$R_r^{/} = \frac{1}{4} \cdot R_k; \; R_s = \frac{3}{4} \cdot R_k; \quad X_r^{/} = \frac{1}{3} \cdot X_k; \; X_s = \frac{2}{3} \cdot X_k .$$

Table 6 - Data for an asynchronous motor

Variant number	Nominal power	Number of pole pairs	Nominal slip	Nominal voltage of the stator winding	COP	Nominal power factor	Results of laboratory experience short-circuit:	
							Reactive resistance	Active resistance
	P_N, *kW*	p	s_N, %	U_s, *kV*	η, %	cosφ	X_k, *Ohm*	R_k, *Ohm*
1	10.0	4	4.3	0.4	80.5	0.87	1.1	0.26
2	15.0	3	2.7	0.4	80.0	0.83	1.0	0.26
3	20.0	2	3.1	0.4	81.8	0.73	0.98	0.13
4	30.0	1	3.5	0.4	83.0	0.74	1.1	0.12
5	40.0	3	2.0	0.66	86.5	0.89	0.91	0.11
6	50.0	2	3.0	0.66	85.5	0.86	1.0	0.12
7	75.0	1	3.2	0.66	87.5	0.81	1.5	0.30
8	11.0	4	4.7	0.4	88.0	0.75	1.2	0.24
9	15.0	1	2.3	0.4	90.0	0.91	1.6	0.32
10	18.5	2	2.7	0.4	90.0	0.88	1.6	0.79
11	22.0	3	2.5	0.4	89.0	0.90	1.5	0.34
12	30.0	4	2.0	0.66	90.5	0.81	1.3	0.28
13	37.0	5	1.8	0.66	90.5	0.81	1.6	0.40
14	45.0	3	2.5	0.66	91.0	0.75	1.5	0.36
15	55.0	3	2.5	0.66	92.5	0.78	1.6	0.48

3.2 Methodical instructions for solving tasks

3.2.1 Methodological instruction for solving Task

Conversion of electrical energy into mechanical energy in AM, as well as in other electrical machines, is performed with a power loss, so net engine power P is always less than the power consumption P_{in} for the value of these losses of power ΔP

$$P = P_{in} - \Delta P, \text{ W},$$

where P_{in} – power, which an asynchronous motor draws from the electric grid

$$P_{in} = \frac{P}{\eta}, \text{ W}.$$

Power loss in electrical machines ΔP is divided into basic and additional. The basic losses include magnetic, electrical and mechanical power loss.

For the calculations take values:

– mechanical power loss, $P_{mec} = 0.02\ P_N$, W,

– magnetic power loss, $P_{mag} = 0.01\ P_N$, W,

– additional power loss, $P_{ad} = 0.005\ P_N$, W.

In engineering calculations, it can be assumed that the mechanical and magnetic losses are constant and equal the loss of power at idling mode.

At the current frequency in the electric grid $f = 50$ *Hz* and within the range of the rated motor slip s_N = 2–8 %, the frequency of the reversal magnetization of the rotor is equal to a few hertz ($f_r = f_s \cdot s =$ 1–4 Hz). Therefore, power loss in the magnetic core of the rotor does not taken into account in practice and is not shown in the energy diagram.

Additional power losses include all kinds of losses that were not taken into account earlier: from the higher harmonics of the MMP, from pulsation of the magnetic induction in the teeth, etc. Additional power loss can be attributed to a permanent loss with a sufficient accuracy.

Electric power losses in the stator and rotor windings of asynchronous motors (P_{el}) are variable and depend on the load:

1) nominal electric power loss in the stator winding $P_{el.sN} = m \cdot I_{sN}^2 \cdot R_s$, W,

where I_{sN} - nominal current of the stator $I_{sN} = \dfrac{P_{inN}}{m_s \cdot U_{sN} \cdot \cos\varphi_N}$, A;

U_{sN} – stator winding nominal phase voltage when connected in a "star"

$$U_{sN} = \frac{U_N}{\sqrt{3}}, \text{ V};$$

R_s – stator winding active resistance $R_s = \dfrac{3}{4} R_k$, Ohm;

2) electrical power loss in the rotor winding at rated nominal mode is directly proportional to slip $P_{el.rN} = s_N \cdot P_{emN}$, W,

where P_{emN} – nominal electromagnetic power of an asynchronous motor,

$$P_{emN} = P_{inN} - (P_{mag} + P_{el.sN}), \text{ W}.$$

The total losses of the AM with a variable load, which is characterized by a coefficient β $\Delta P = P_{mag} + P_{mech} + P_{ad} + \beta^2 \cdot (P_{el.s} + P_{el.r})$, W.

Example of the construction of the energy diagram AM is shown in Fig. 6.

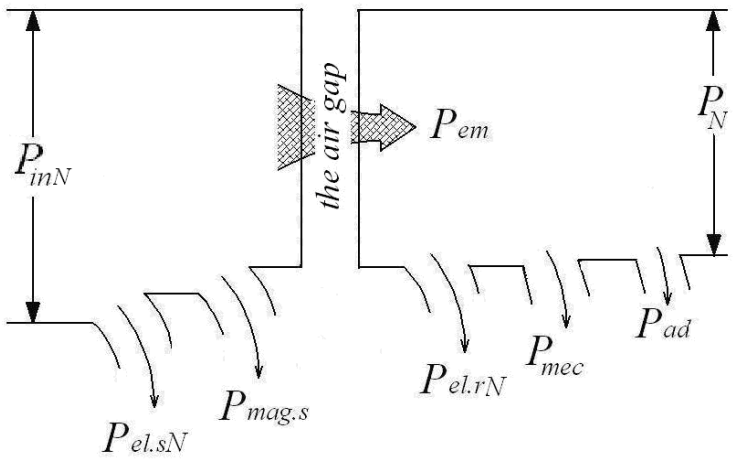

Figure 6 –Energy diagram of asynchronous motor

The asynchronous motor nominal COP:

$$\eta_N = \frac{P_N}{P_{inN}} = 1 - \frac{\Delta P_N}{P_{inN}},$$

where ΔP_N – total nominal loss power of AM, which include constant and variable losses in the nominal mode

$$\Delta P_N = P_{const} + P_{varN}, \text{ W}.$$

The amount of the AM constant power losses

$$P_{const} = P_{mag} + P_{mec} + P_{ad}, \text{ W}.$$

Sum of variable power losses of asynchronous motor in the nominal mode

$$P_{varN} = P_{el.sN} + P_{el.rN}, \text{ W}.$$

4. DEFINITION OF THE SYNCHRONOUS HYDROGENERATOR OVERLOAD CAPACITY

4.1. Theoretical task

Describe the synchronous generators rotors design features, which are used in thermal power plants (including nuclear powers) and in hydro powers. Explain the difference of rotors designs of these generators. Draw sketches of the synchronous generators rotors with obviously expressed and with implicitly expressed poles.

Record the conditions for the inclusion of parallel operation of synchronous generators in a network with precise synchronization.

4.2 Task

Construct the angular characteristic of the three-phase salient poles synchronous generator by the data presented in Table 8, and calculate its overload capacity.

Compare the angular characteristic for a three-phase synchronous generator with obviously expressed and with implicitly expressed rotor poles.

Explain why they are different.

4.3 Methodological instructions for the implementation of task

Calculate nominal phase voltage of the stator winding

$$U_{sN} = \frac{U_N}{\sqrt{3}}, \text{ V}.$$

The electromagnetic moment M_{em} in synchronous machines is proportional to electromagnetic power P_{em}. Therefore we can build angular response as dependency $M_{em}(\theta)$ or $P_{em}(\theta)$, where θ - angle load (angle "flight") is the angle between the flow

and the rotor winding armature reaction flux vector, or between the vector EMP E_{so} and the vector of the stator voltage U_s.

Table 8 - Data for a three-phase synchronous generator

variant number	Stator winding nominal voltage	Nominal power factor	Relative value of EMF in the idling mode	Cross inductive reactance	Longitudinal inductive reactance	The angle between the vector stator current and the vector stator EMF	Scheme connections of the stator winding
	U_{sN}, kV	$\cos\varphi_N$	$E_{so}^* = \frac{E_o}{U_{sN}}$	X_q, Ohm	X_d, Ohm	ψ_N, el. degr.	
1	6	0.90	1.30	4.21	6.42	52	Y
2	0.4	0.91	1.33	0.935	1.42	54	Y
3	10	0.92	1.31	5.35	8.82	53	Y
4	6	0.93	1.34	2.48	3.82	52	Y
5	6	0.90	1.32	3.12	5.04	54	Y
6	0.4	0.89	1.36	5.20	7.46	54	Δ
7	0.4	0.89	1.30	4.02	6.18	52	Y
8	6	0.90	1.33	2.12	3.44	53	Y
9	6	0.91	1.37	1.96	3.12	52	Y
10	10	0.90	1.30	5.00	7.36	54	Y
11	10	0.91	1.44	3.18	6.84	50	Y
12	6	0.92	1.20	5.10	7.44	51	Y
13	6	0.93	1.35	4.18	6.54	52	Y
14	6	0.92	1.22	5.24	7.85	54	Y
15	0.23	0.91	1.35	3.36	5.68	55	Δ

Build angular response as a dependency $P_{em}(\theta)$:

$$P_{em} = \frac{m \cdot U_{sN} \cdot E_{so}}{X_d} \cdot \sin\theta + \frac{m \cdot U_{sN}^2}{2} \cdot \left(\frac{1}{X_q} - \frac{1}{X_d} \right) \cdot \sin 2\theta \text{, W,} \qquad (4.1)$$

where E_{so} – EMF, which a magnetic flux field winding induces in the stator winding

$$E_{so} = E_{so}^* \cdot U_{sN} \text{, V.}$$

Angular characteristics of synchronous generators with obviously expressed and with implicitly expressed rotor poles are different, because generators with obviously expressed poles have $X_q < X_d$, while the generators with implicitly expressed rotor poles considered to be $X_q = X_d$.

The data of calculations of the angular characteristics are presented in Table 9.

Table 9 – Calculation of angular characteristics of three-phase synchronous generator with obviously expressed rotor poles

Parameters	Values of load angle θ, el. degr.									
	0	θ_N	30	60	θ_{cr}	90	120	135	150	180
$\sin\theta$										
$\frac{m \cdot U_{sN} \cdot E_{s0}}{X_d} \cdot \sin\theta$, W										
$\sin 2\theta$										
$\frac{m \cdot U_{sN}^2}{2} \cdot \left(\frac{1}{X_q} - \frac{1}{X_d}\right) \cdot \sin 2\theta$, W										
$P = \frac{m \cdot U_{sN} \cdot E_{s0}}{X_d} \cdot \sin\theta + \frac{m \cdot U_{sN}^2}{2}\left(\frac{1}{X_q} - \frac{1}{X_d}\right) \cdot \sin 2\theta$, W										

Critical load angle at which the electromagnetic power peaks is

$$\theta_{cr} = \arccos(\sqrt{\beta^2 + 0{,}5} - \beta), \text{ el. degr.}$$

Where the design factor is: $$\beta = \frac{E_{so}}{4 \cdot U_{sN} \cdot \left(\frac{X_d}{X_q} - 1\right)}.$$

The nominal load angle is

$$\theta_N = \psi_N - \varphi_N, \text{ el. degr,}$$

where ψ_N – the angle between the vector stator current I_s in nominal mode and the vector EMF in stator winding (E_{so}) in idling mode, el. degr;

φ_N – the angle between the vector voltage U_{sN} of stator and the vector current I_{sN} of stator in nominal mode, el. degr.

The example angular characteristic of the three-phase synchronous generator with obviously expressed poles is presented in Fig. 8.

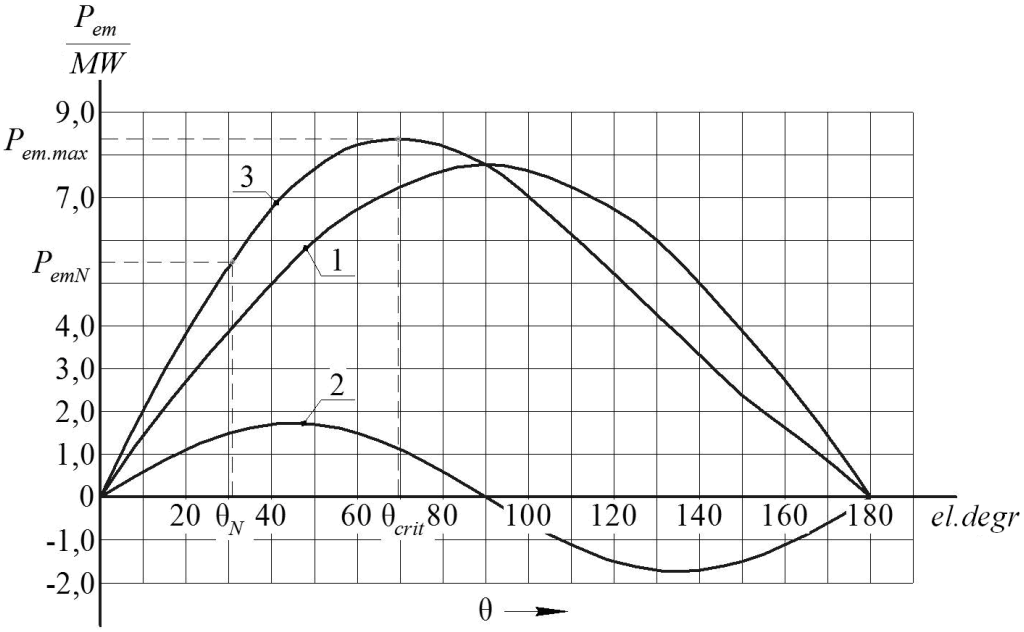

Figure 8 – The angular characteristic of the three-phase synchronous generator with obviously expressed rotor poles

In fact the graph of angular characteristic of three-phase synchronous generator with obviously expressed poles design is the sum of two characteristics – the first and the second elements in the formula (4.1). Therefore, it can be constructed analytically using the notation of the last function in Table 9, (Graph 3, Fig. 8). Or you can first construct graphs on the first and the second elements (the second and fourth lines in Table 9, graph 1 and graph 2 in Fig. 8), and then add them up graphically. The electromagnetic power (P_{max}) at the critical load angle (θ_{cr}) is maximum.

Usually θ_{cr} =75-80 el. degrees for the synchronous generator with obviously expressed poles.

Calculate the coefficient of static overload (overload capacity) of the synchronous machine:

$$K_{Mm} = \frac{P_{em.max}}{P_{em.N}}$$

K_{st} value should be within the range: for hydro generators K_{Mm} = 1.3–1.5; for turbogenerators K_{Mm} = 1.7–1.8.

5 DESCRIPTION OF THE DESIGN AND ANALYSIS OF DIRECT CURRENT MOTORS

5.1 Theoretical assignments

Describe the principle of operation of the direct current motors (DCM). Specify their advantages and disadvantages in comparison with other types of machines. Draw a sketch of a four pole DCM and possible strategies to incorporate field windings: an independent, parallel, serial and mixed.

In the written form respond to the questions for different schemes of excitation winding according to the plan:

– in which electrical drives exactly same engines are used;

– how to handle the speed frequency of rotation and perform DCM reverse;

– what are the ways of braking DCM;

– what problems exist while DCM launching and how to solve them.

5.2 Methodological instructions for the task implementation

There are DC machine with an independent, parallel, serial and mixed excitation, Fig. 9. For motors used by all schemes include excitation windings. The consistent excitations are not used for DC generators, Fig. 9, *c*.

The winding of the main poles in motors with separate excitation is powered by a separate DC power source (see Fig. 9, *a*). The windings of excitation and the anchor winding in the motors with parallel excitation are connected in parallel and powered by one source (see Fig. 9, *b*).

The windings of the main poles in motors with mixed excitation have two schemes of involving: primary windings are connected in parallel with the anchor winding, and the secondary one - in series (see Fig. 9, *c*).

The excitation windings in motors with series excitation are connected in series with the anchor winding (see Fig. 9, *d*).

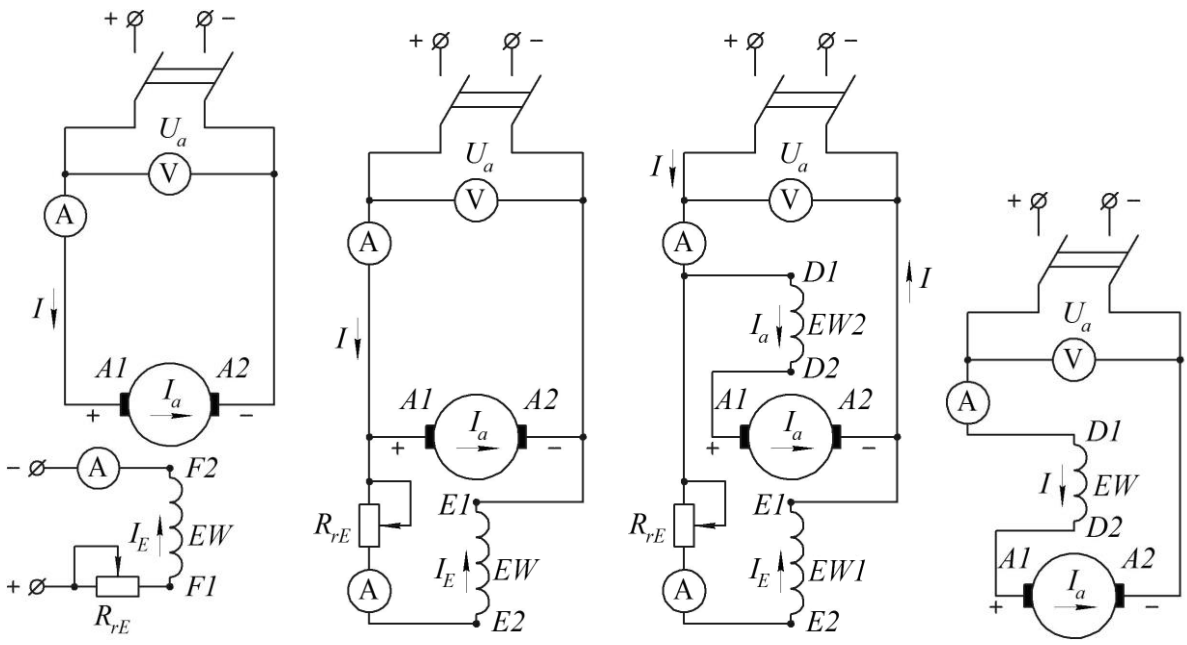

Figure 9 – Wiring excitation windings of the DC machines

a – separate excitation; *b* – parallel excitation;

c – mixed excitation; *d* – consistent excitation

The rotational speed of DC motor is

$$n = \frac{U_a - I_a R_{a.k.}}{C_E \cdot \Phi}, \text{ rpm.}$$

where U_a, V – voltage that is supplied to the DC motor armature;

Φ, Veb – magnetic flux of the main poles; I_a, A – archon current;

$R_{a.k}$ – total resistance of the main chain windings,

$$R_{a.k} = R_a + R_{ad} + R_{comp} + f(R_W), \text{ Ohm}$$

R_a, Ohm – archon-winding resistance;

R_{ad}, Ohm - additional poles winding resistance;

R_{comp}, Ohm - compensation winding resistance;

$f(R_W)$, Ohm – excitation winding resistance with the circuit to turn it on;

C_E – motor constant

$$C_E = \frac{p \cdot N_a}{60 \cdot a},$$

p – number of pairs of the main poles;

a – number of pairs of the parallel branches of the archon-winding;

N_a – number of the archon-winding conductors.

The motors with parallel and mixed excitation are the most widely used. The independent excitation is used for the most powerful motors, which are installed on drives of the technological equipment in the steel industry, for mine hoists, large machine tools, etc.

The motors with parallel excitation are generally used in the machine tool industry, in low and average power drives.

The most commonly used DC motors with mixed excitation winding. Such motors are sometimes called the motors with parallel winding and with stabilizing one. The parallel winding of execration is parallel and the series winding stabilizes the change of the motor rotation frequency of the engine when the load changes. The motors with series excitations are usually used to drive the electric drive train (tram, trolley, subway and railway).

LIST OF REFERENCES

1. Токарев Б.И. Электрические машины. Учебник. – Москва: Энергоатомиздат, 1993. – 424 с.

2. Вольдек А.И. Электрические машины. Учебник. – Л.: Энергия, 1979. – 816 с.

3. Мілих В.І. Електротехніка та електромеханіка: Навч. посібник. – К.: «Каравела», 2006. – 376 с.

4. Копылов И.П. Электрические машины. Учебник. – Москва: Энергоатомиздат, 1986. – 360 с.

5. Кацман М.М. Электрические машины. Учебник. – Москва: Высшая школа, 1990, 2000, 2006.

APPENDIX A

Example of the title page of the calculated jobs

MINISTRY OF EDUCATION AND SCIENCE OF UKRAINE

National Technical University
"Kharkiv Polytechnic Institute"

Department of Electrical Machines

THE COMPUTATIONAL TASKS ON THE DISCIPLINE «ELECTRICAL MACHINES»

by a third-year student
group _____

_____
(Student's name and surname)

Section name	Date of completion mark the teacher's signature
1. Transformer design description and their parameters calculation in the nominal mode	
2. General questions of the alternating current machine theory	
3. Calculations of the energy diagram and choice of the asynchronous motor starting resistors	
4. Definition of the synchronous hydrogenerator overload capacity	
5. Description of the design and analysis of direct current motors	

Kharkiv – 20___ p.