1. WIND ENERGY

1.1 Types of Wind energy

Wind energy (or wind power) refers to the process of creating electricity using the wind, or air flows that occur naturally in the earth's atmosphere. Modern wind turbines are used to capture kinetic energy from the wind and generate electricity.

There are three main types of wind energy:

2.1.1 Utility-scale wind: Wind turbines that range in size from 100 kilowatts to several megawatts, where the electricity is delivered to the power grid and distributed to the end user by electric utilities or power system operators.

Figure 1.1 - Utility scale wind power plant

1.1.2 Distributed or "small" wind

Single small wind turbines below 100 kilowatts that are used to directly power a home, farm or small business and are not connected to the grid.

Figure 1.2 - Single small wind turbines

1.1.3 Offshore wind

Wind turbines that are erected in large bodies of water, usually on the continental shelf. Offshore wind turbines are larger than land-based turbines and can generate more power.

Figure 1.3 - The potential of offshore wind energy

1.2 Why Wind Beats Other Renewable Power Sources

In areas where other forms of renewable energy aren't available, wind power is a viable option. Permanent wind turbines may be built off the ocean to harness the constant sea breezes, but floating solar panels are a risky proposition. Tidal energy is inefficient and not yet ready for widespread use.

Wind turbines, like all other forms of renewable energy, require maintenance. Hydroelectric turbines, like wind turbines, require regular maintenance. Wind turbines, on the other hand, can be installed in areas that are too dry or flat for hydroelectric power, and they operate just fine in areas where solar power isn't feasible.

Wind turbines may be shut down if they get iced over, but they will thaw out eventually. Wind turbines do not need the same level of cleaning as solar panels, which is a delicate topic provided that they require water or chemical cleaners to clean despite being located in dry environments. This helps to understand why more than 35,000 wind turbines are in use around the world.

Wind turbines do not necessitate the extraction of rare earth minerals from far-flung corners of the globe. It can be used in a variety of settings and allows for local energy production. Wind power could produce the same amount of energy as 20 billion barrels of oil. That is the annual amount of oil extracted around the world. When wind turbines are installed, no carbon is emitted.

1.3 Modern wind turbines

A modern wind turbine is a mechanism that converts the kinetic energy of the wind into mechanical energy, which is then converted into electrical energy. Wind turbine architecture has advanced dramatically in the last three decades, in tandem with new technical advancements.

Advances in aerodynamics, structural dynamics, and micrometeorology have been projected to lead to a 5% annual rise in wind turbine energy yield. Various wind turbine designs have been designed and installed with the aim of optimizing wind

energy performance while lowering turbine costs and improving turbine efficiency and reliability [3]

1.3.1 Wind turbine classification

Wind turbines can be classified according to the turbine generator configuration, airflow path relatively to the turbine rotor, turbine capacity, the generator-driving pattern, the power supply mode, and the location of turbine installation.

Horizontal-axis and vertical-axis wind turbines When considering the configuration of the rotating axis of rotor blades, modern wind turbines can be classified into the horizontal-axis and vertical-axis turbines. Most commercial wind turbines today belong to the horizontal-axis type, in which the rotating axis of blades is parallel to the wind stream. The advantages of this type of wind turbines include the high turbine efficiency, high power density, low cut-in wind speeds, and low cost per unit power output. Several typical vertical-axis wind turbines are shown in Fig.1.4 The blades of the vertical-axis wind turbines rotate with respect to their vertical axes that are perpendicular to the ground.

A significant advantage of vertical-axis wind turbine is that the turbine can accept wind from any direction and thus no yaw control is needed. Since the wind generator, gearbox, and other main turbine components can be set up on the ground, it greatly simplifies the wind tower design and construction, and consequently reduces the turbine cost. However, the vertical-axis wind turbines must use an external energy source to rotate the blades during initialization. Because the axis of the wind turbine is supported only on one end at the ground, its maximum practical height is thus limited. Due to the lower wind power efficiency, vertical-axis wind turbines today make up only a small percentage of wind turbines [7]

The horizontal-axis wind turbines can be divided into upwind and downwind wind turbines based on the configuration of the wind rotor in relation to the wind flow direction. Upwind wind turbines, in which the wind rotors face the wind, make up the bulk of horizontal-axis wind turbines in operation today. The horizontal-axis

wind turbines can be further graded as upwind or downwind wind turbines based on the orientation of the wind rotor with respect to the wind flow direction. Upwind turbines, in which the wind rotors face the wind, account for the majority of horizontal-axis wind turbines in operation today. The main advantage of upwind designs is to avoid the distortion of the flow fi eld as the wind passes though the wind tower and nacelle. For a downwind turbine, wind blows first through the nacelle and tower and then the rotor blades. This configuration enables the rotor blades to be made more flexible without considering tower strike [4]

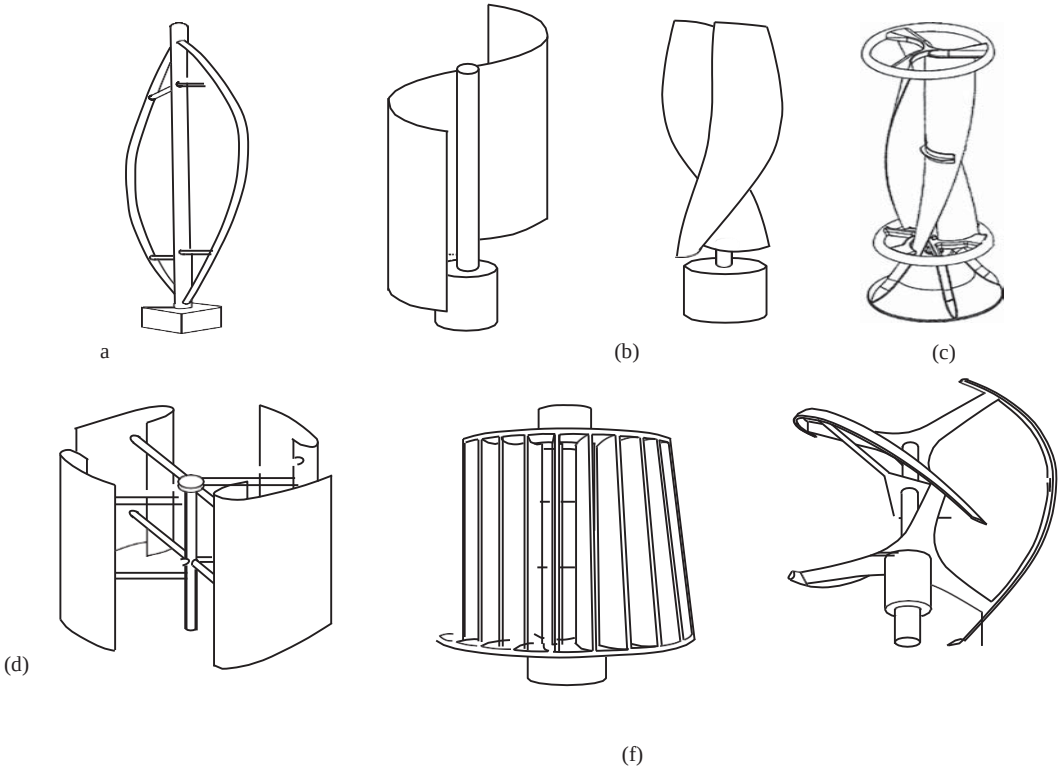

Figure 1.4 - Several typical types of vertical-axis wind turbines: (a) Darrius; (b) Savonius; (c) Solarwind ; (d) Helical ; (e) Noguchi ;(f) Maglev ; (g) Cochrane.

However, because of the influence of the distorted unstable wakes behind the tower and nacelle, the wind power output . The amount of energy generated by a downwind turbine varies greatly.